CAMON

STUMP GRINDER

MODEL C500

PARTS DIAGRAM

Tracmaster Ltd, Teknol House, Victoria Road, Burgess Hill RH15 9LH. T: 0870 224 0369 F: 01444 871612 E: spares@tracmaster.co.uk

C500/0105

WHEEL & BRAKE ASSEMBLY

C500

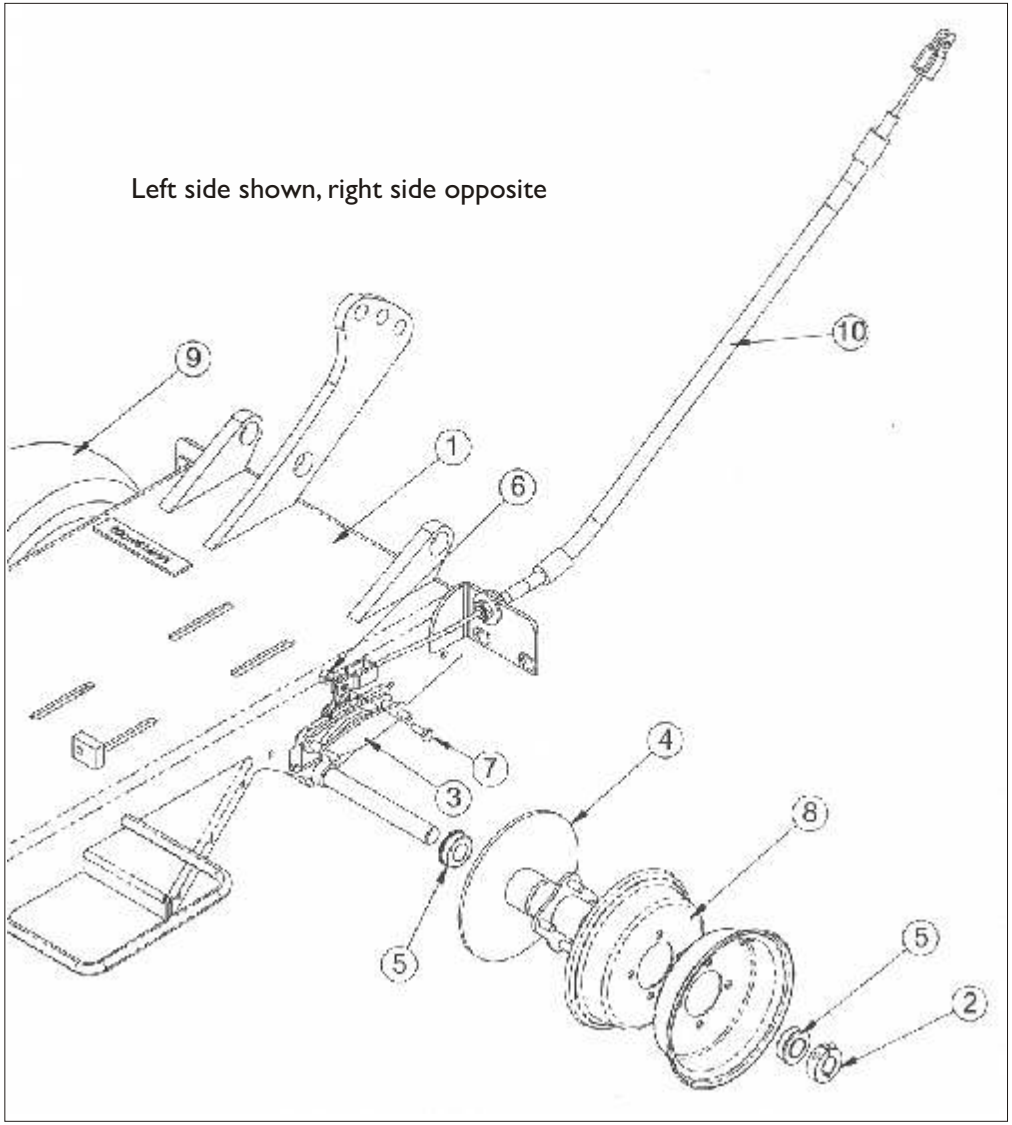

Diag No	Part No	Description	Qty
1	10749	Main Frame Weldment	1
2	761779	Collar - Clamp 3/4"	2
3	761585	Brake Mechanism (left side only)	1
4	10795	Wheel Weld. Brake (left side only)	1
5	761581	Bearing - Wheel	4
6	724508	Nut Lock 1/4"-20 Nylock	1
7	722103	Bolt - Hex 1/4"-20 x 3/4" GR8	1
8	762266	Wheel, Three Piece 6"	2
9	761671	Tyre - 4.10 x 6 x 12.8 Dia. (left side not shown)	2
	761680	Tube - 4-10-6 (not shown)	2
10	10419	Brake Cable Assembly (left side only)	1

NOTE: Quantities shown are for two-wheel assemblies

TRACMASTER
Landscape • Groundcare • Conservation

Teknol House, Victoria Road, Burgess Hill RH15 9LH. T: 0870 224 0369 F: 01444 871612 E: spares@tracmaster.co.uk

HANDLE BAR ASSEMBLY

C500

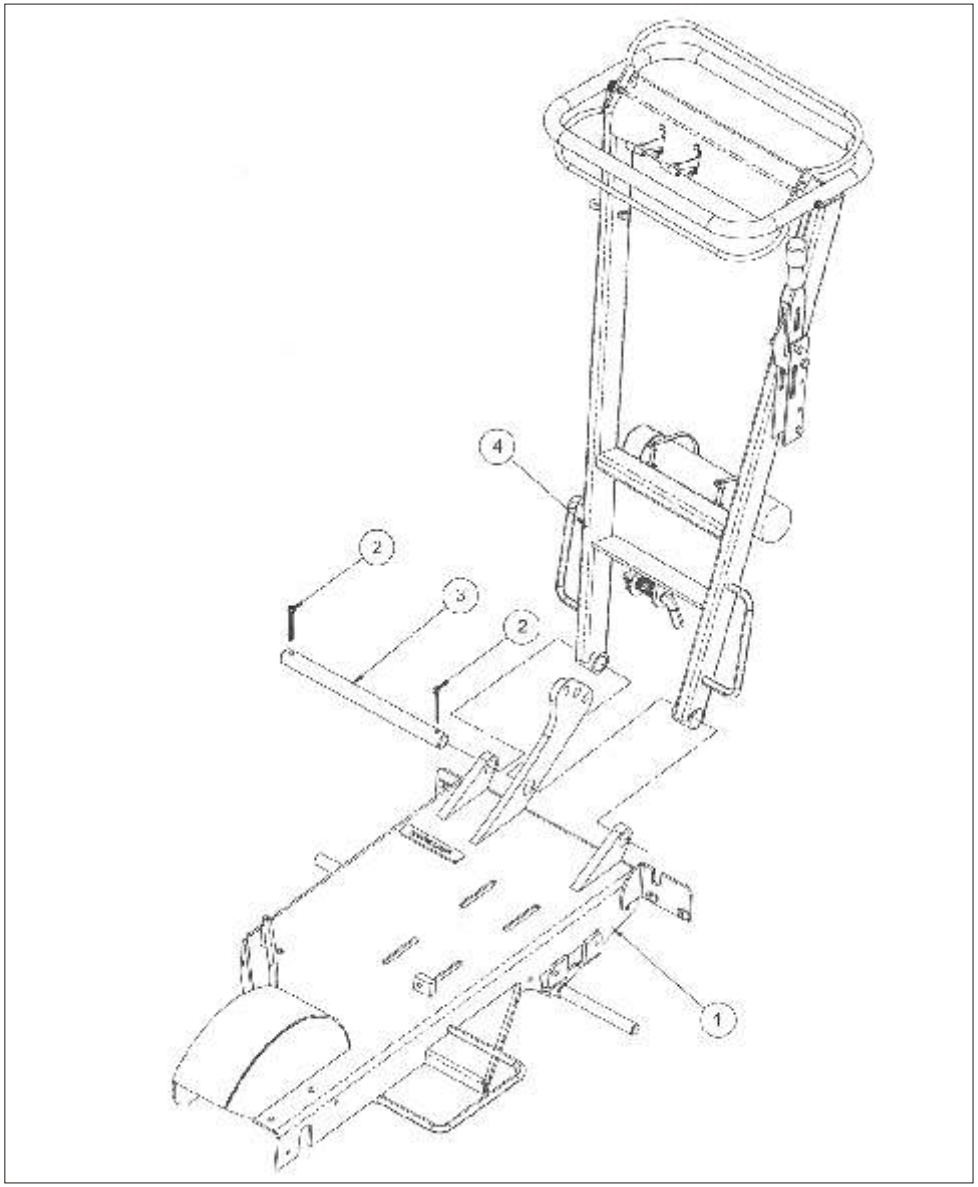

Diag No	Part No	Description	Qty
1	REF	Main Frame Weldment	1
2	960200	Pin - Cotter 1/4" x 2	2
3	11159	Pin - Hinge	1
4	10831	Handle Bar Assembly	1

TRACMASTER
Landscape • Groundcare • Conservation

Teknol House, Victoria Road, Burgess Hill RH15 9LH. T: 0870 224 0369 F: 01444 871612 E: spares@tracmaster.co.uk

HANDLE BAR ASSEMBLY (continued)

C500

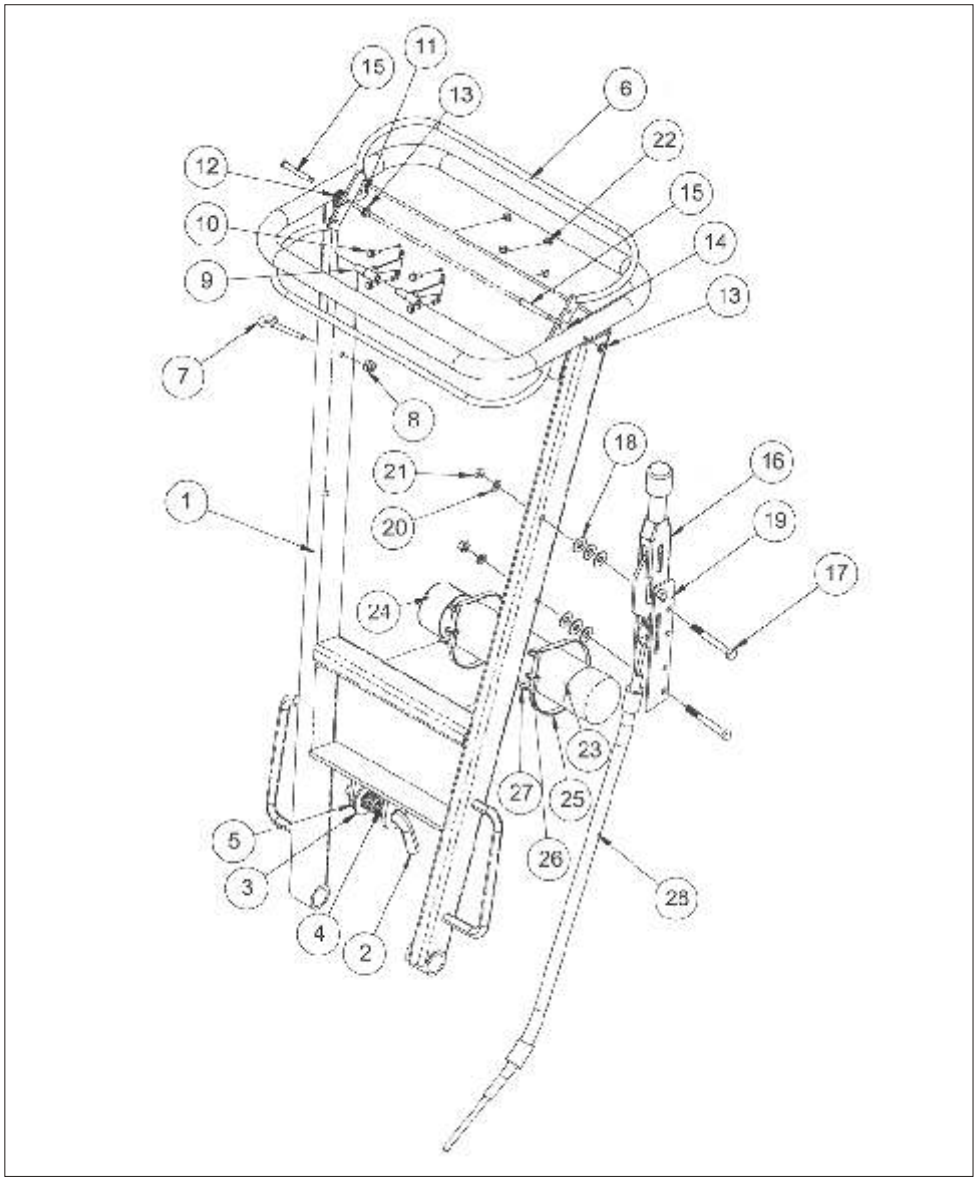

Diag No	Part No	Description	Qty	Incl'd In
1	10762	Handle Bar Weld	1	10831
2	10830	Pin - Lock	1	"
3	726701	Washer - Flat - 5/8"	1	"
4	630012	Spring - Lock 3/4"	1	"
5	730095	Pin - Roll, 3/16" x 1-1/4"	1	"
6	1601	Handle - Bail - Weld	1	"
7	722711	Bolt - Eyebolt 1/4-20	1	"
	762141	Rope - Braided Nylon (not shown)	1	"
8	724508	Nut - Lock 1/4"-20 Nylock	2	"
9	762140	Throttle - Actuator	2	"
10	750456	Screw - #10-24 x 1/2 HH Mach	4	"
11	630010	Switch - Deadman	1	"
12	10431	Spring - Torsion	1	"
13	630013	Nut - Push - 1/4"	2	"
14	7013-04	Spacer - 7/16 OD x 0.272 ID	2	"
15	728014	Pin - Clevis 1/4" x 2"	2	"
16	610005	Lever - Brake	1	"
17	722204	Bolt - Hex 5/16"-18 x 2-3/4" GR8	2	"
18	726201	Washer - Flat 5/16"	6	"
19	2541-01	1/2 OD x 14 GA Wall Tubing	1	"
20	726202	Washer Lock 5/16" Plated	2	"
21	724201	Nut - Hex 5/16"-18 GR8	2	"
22	724102	Nut - Hex #10-24	4	"
23	8719-01	Tube - Plastic	1	"
24	630052	Cap - Black, Tube, Manual	2	"
25	730021	Wire Tie 14"	2	"
26	630053	Mount - Screw, Tube, Manual	2	"
27	760256	Screw - #10 x 3/4 Type B	2	"
28	REF	Brake Cable Assembly	1	"

TRACMASTER
Landscape • Groundcare • Conservation

Teknol House, Victoria Road, Burgess Hill RH15 9LH. T: 0870 224 0369 F: 01444 871612 E: spares@tracmaster.co.uk

BELT COVER

C500

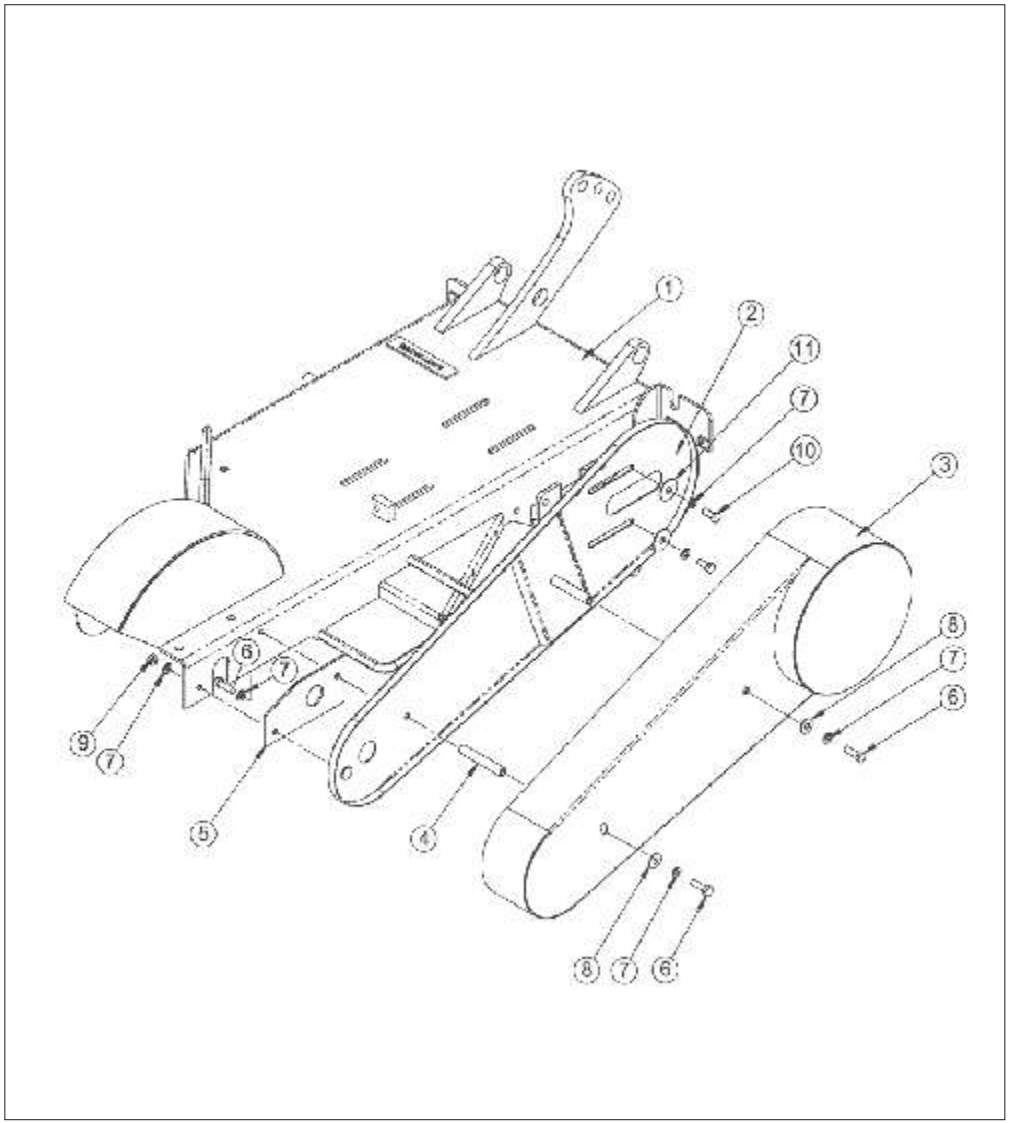

Diag No	Part No	Description	Qty
1	REF	Main Frame Weldment	1
2	10388	Back - Belt Guard Weld.	1
3	10389	Belt Guard Weld.	1
4	10392	Spacer - VBG	1
5	1525	Curatin - Belt Guard Buffer	1
6	722205	Bolt Hex 5/16”-18 x 1 GR8	3
7	726202	Washer Lock 5/16” Plated	6
8	726201	Washer - Flat 5/16”	2
9	724201	Nut Hex 5/16”-18 GR8	1
10	750521	Bolt Hex 5/16”-24 x 3/4 GR8	2
11	4900-35	Washer 14 GA 0.375 x 1.25	2

TRACMASTER
Landscape • Groundcare • Conservation

Teknol House, Victoria Road, Burgess Hill RH15 9LH. T: 0870 224 0369 F: 01444 871612 E: spares@tracmaster.co.uk

SAFETY CURTAINS

C500

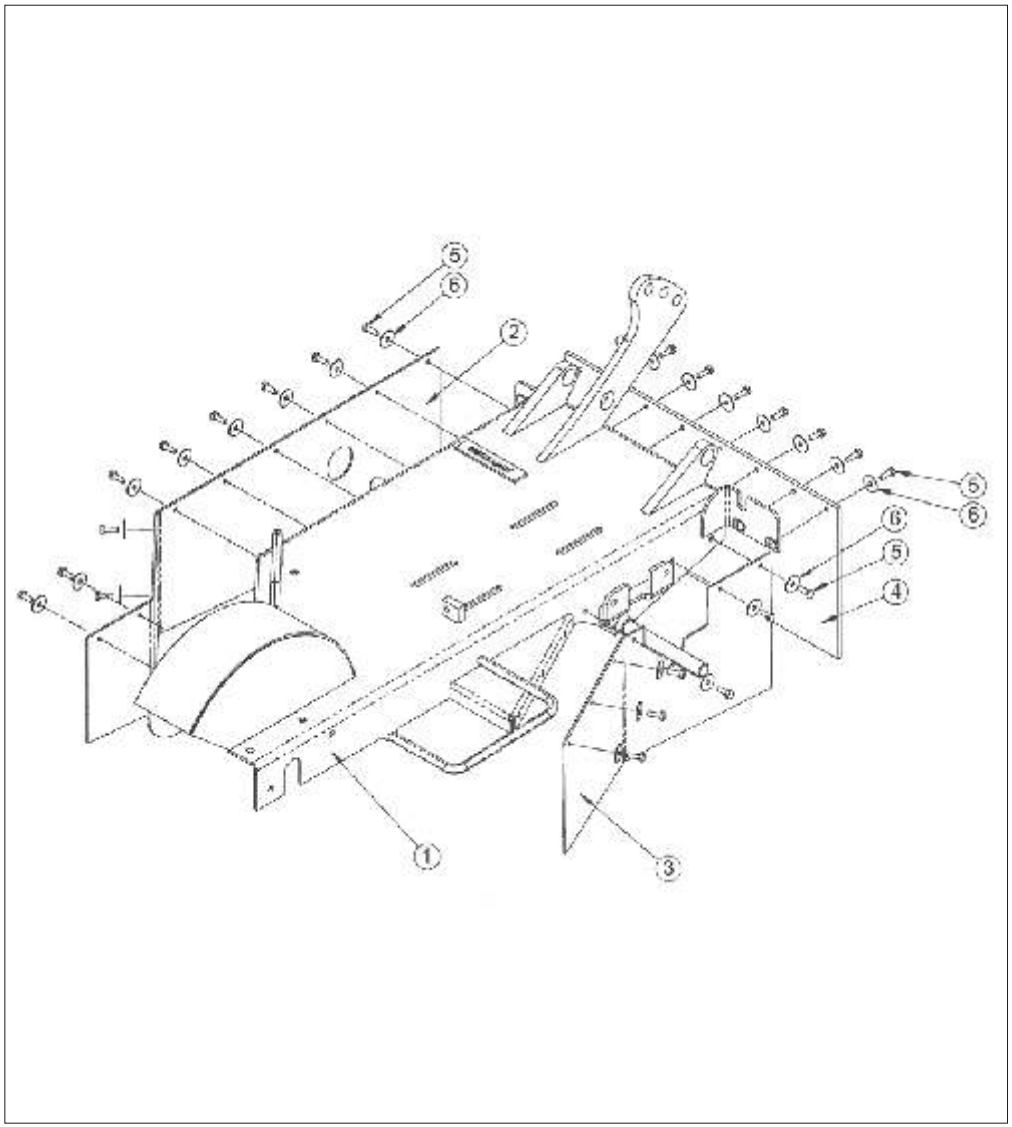

Diag No	Part No	Description	Qty
1	REF	Main Frame Weldment	1
2	10819	Curtain - Side	1
3	10821	Curtain - Side Guard	1
4	10823	Curtain - Back	1
5	722103	Bolt Hex 1/4”-20 x 3/4” GR8	24
6	726607	Fender Washer	24

TRACMASTER
Landscape • Groundcare • Conservation

Teknol House, Victoria Road, Burgess Hill RH15 9LH. T: 0870 224 0369 F: 01444 871612 E: spares@tracmaster.co.uk

CUTTER WHEEL DRIVE SYSTEM

C500

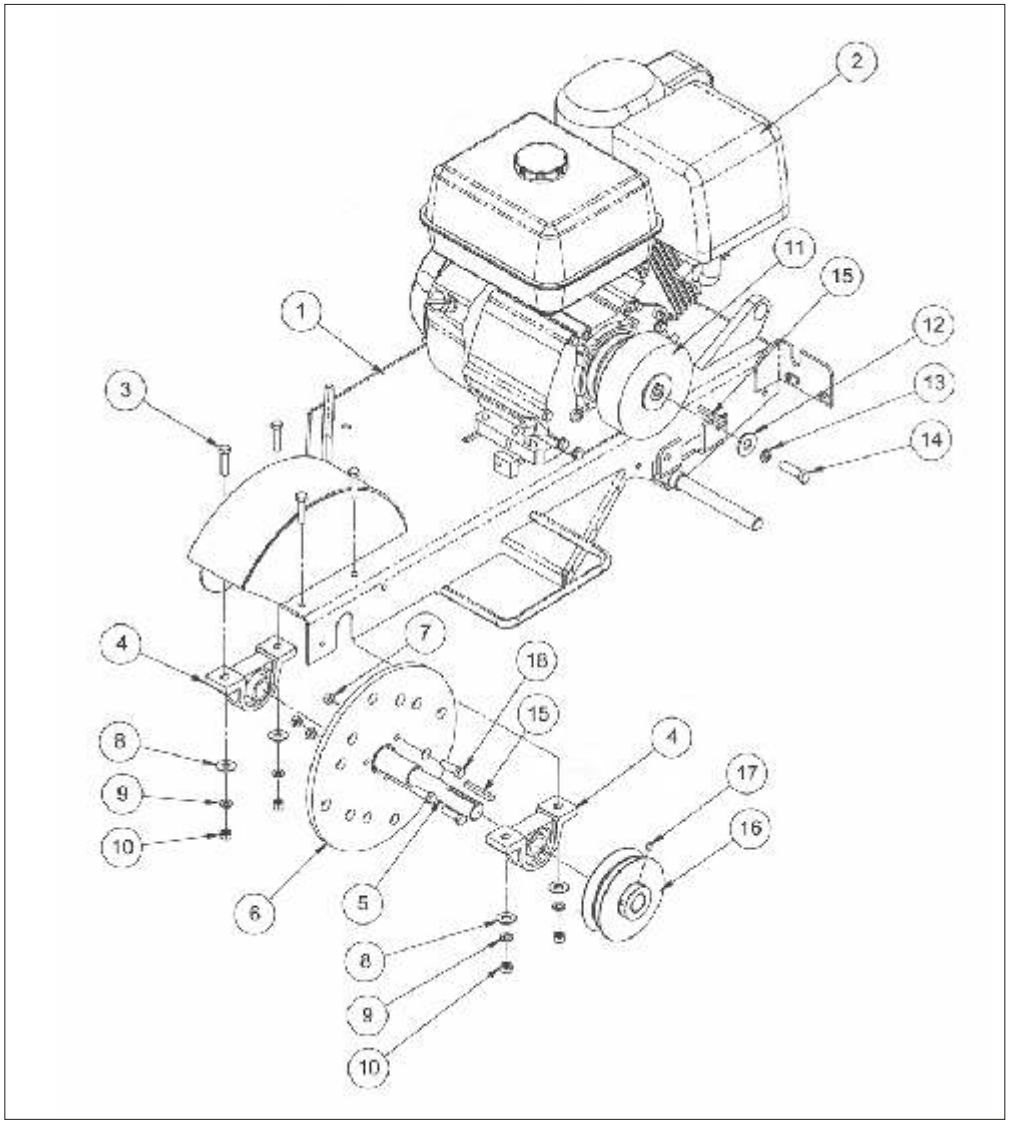

Diag No	Part No	Description	Qty
1	REF	Main Frame Weldment	1
2	762251	Engine - Honda 13hp	1
3	722305	Bolt - Hex 3/8”-16 x 1-1/2	4
4	761637	Bearing - PB 1”	2
5	10380	Shaft Weld, Cutter Wheel	1
6	10371	Cutter Wheel, 3/8” x 11 8T	1
7	724300	Nut - Lock 3/8”-16	3
8	726301	Washer - Flat 3/8” USS	4
9	726302	Washer - Lock 3/8”	4
10	724301	Nut Hex 3/8”-16 GR8	4
11	761636	Clutch, Centrifugal	1
12	726501	Washer - Flat 1/2”	1
13	761373	Washer - Lock 7/16”	1
14	761374	Bolt - Hex 7/16”-20 x 1-1/2” GR8	1
15	2581-03	Keystock, 1/4” x 2	2
16	10452	Sheave, Cutter Wheel	1
17	730053	Screw - Set 5/16”-18 x 3/8”	1
18	722304	Bolt - Hex 3/8”-16 x 1-1/4”	3
19	761638	Belt - 2A54 (not shown)	1

TRACMASTER
Landscape • Groundcare • Conservation

Teknol House, Victoria Road, Burgess Hill RH15 9LH. T: 0870 224 0369 F: 01444 871612 E: spares@tracmaster.co.uk

CUTTER WHEEL

C500

NOTE: Flywheel side - all teeth on this side are threaded

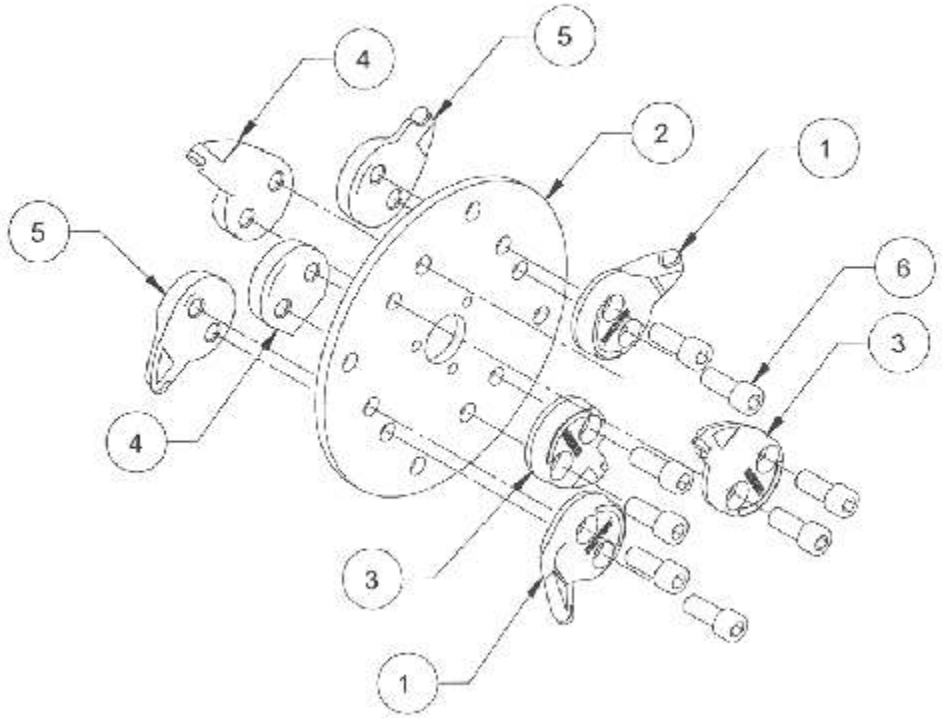

NOTE: Belt guard side - all teeth on this side are counter-bored

Diag No	Part No	Description	Qty
1	2933C	Left Tooth - Counter-Bored	2
2	REF	Cutter Wheel	1
3	3144C	Straight Tooth - Counter-Bored	2
4	2933T	Right Tooth - Threaded	2
5	3144T	Straight Tooth - Threaded	2
6	750949	Socket Head Cap Screw - 5/8"-18 x 1-1/2"	8

TRACMASTER
Landscape • Groundcare • Conservation

Teknol House, Victoria Road, Burgess Hill RH15 9LH. T: 0870 224 0369 F: 01444 871612 E: spares@tracmaster.co.uk

ENGINE SYSTEM

C500

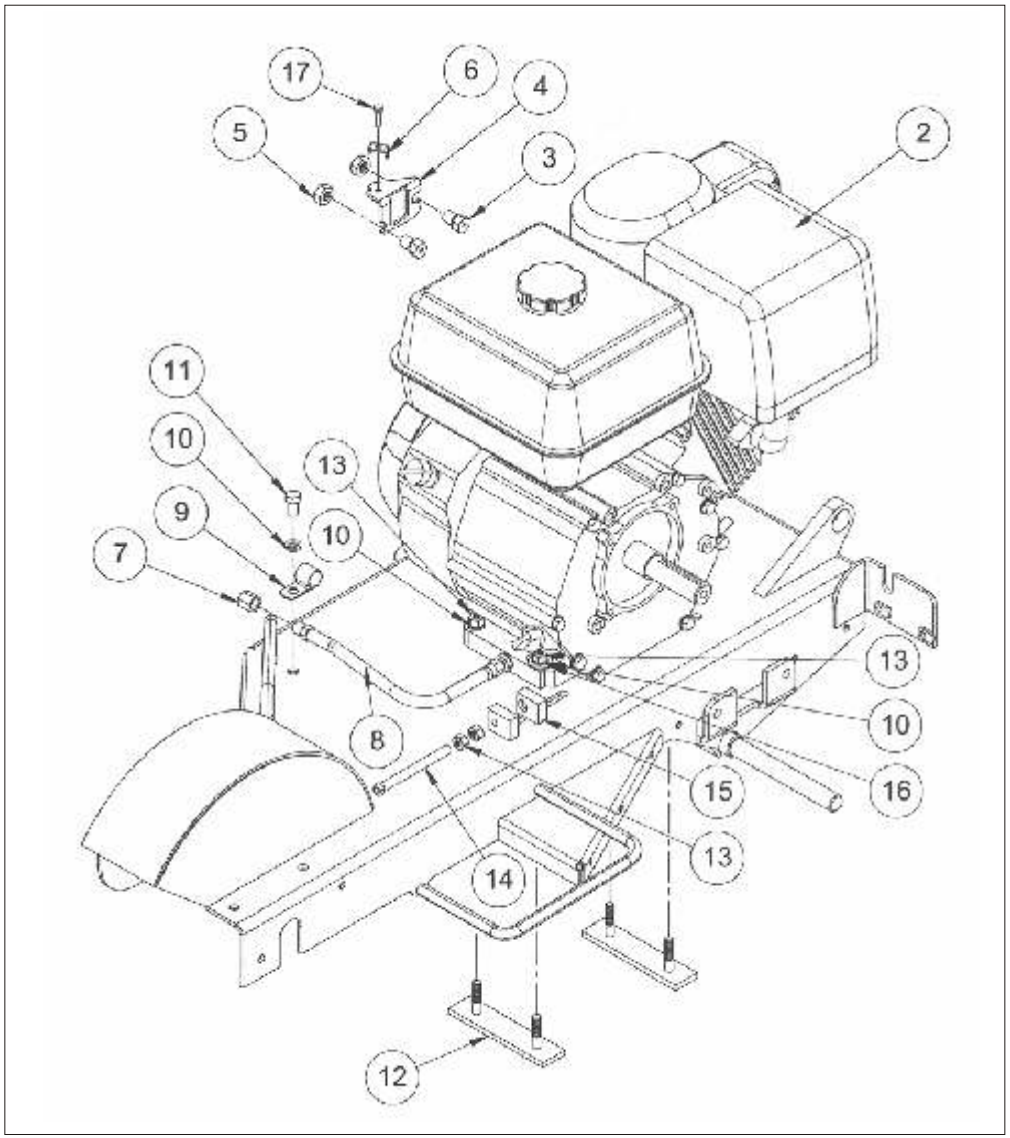

Diag No	Part No	Description	Qty
1	REF	Main Frame Weldment	1
2	762251	Engine - Honda 13hp	1
3	10457	Spacer Nut	2
4	10471	Choke - Bracket - Weld.	1
5	724503	Nut - Lock 1/2”-13	2
6	761642	Clamp - Cable	1
7	738204	Cap - Hex - 4	1
8	750546	Hose - Oil Drain	1
9	730051	Clamp - Vinyl Covered 5/8”	1
10	726302	Washer - Lock 3/8”	3
11	722302	Bolt - Hex 3/8”-16 x 3/4” GR8	1
12	10438	Plate Weld - Back-Up Eng.	2
13	724301	Nut - Hex 3/8”-16 GR8	4
14	750541	Screw - Sq HD Set 3/8”-16 x 4	1
15	1539	Block Engine Adjustment	1
16	726301	Washer - Flat 3/8” USS	1
17	724104	Screw - #10-24 x 3/4” HH	1
18	761643	Deflector - Exhaust (not shown)	1
19	761644	Screw - Mounting Deflector (not shown)	3

TRACMASTER
Landscape • Groundcare • Conservation

Teknol House, Victoria Road, Burgess Hill RH15 9LH. T: 0870 224 0369 F: 01444 871612 E: spares@tracmaster.co.uk