HITACHI

LIST NO. 0341

ELECTRIC TOOL PARTS LIST

■ ORBITAL SANDER

Model SV 12SD

2000-6-1

(E3-1)

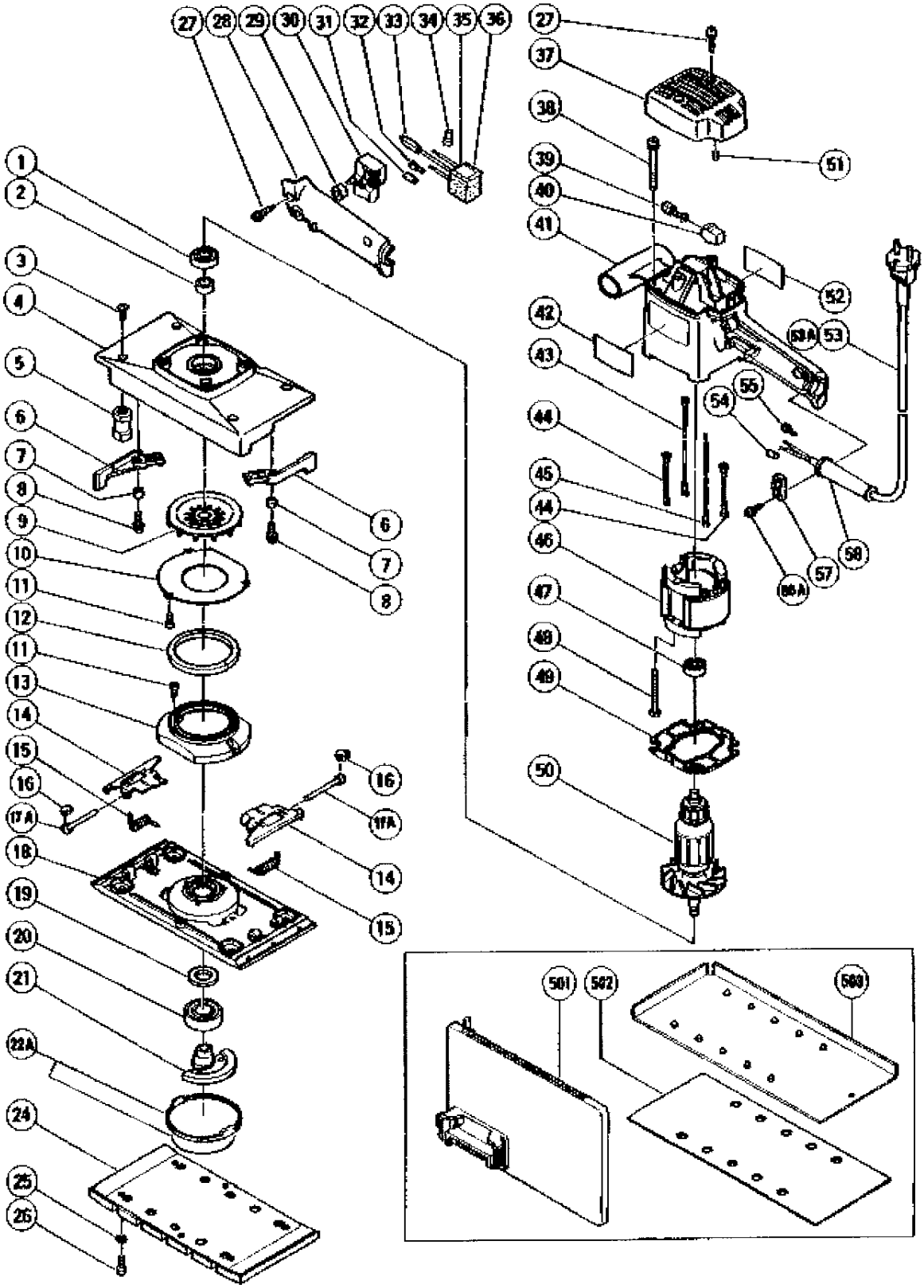

	ITEM No.	CODE No.	DESCRIPTION	No. USED	REMARKS
	1	600-1DD	BALL BEARING 6001DDCMPS2L	1	
	2	300-158	SLEEVE	1	
	3	992-013	SEAL LOCK FLAT HD. SCREW M5X14	4	
	4	300-172	FRAME	1	
	5	300-317	RUBBER LEG	4	
	6	300-161	LEVER	2	
	7	953-066	DISTANCE PIECE	2	
	8	993-539	MACHINE SCREW (W/WASHERS) M4X16	2	
	9	300-159	FAN	1	
	10	300-160	DUST FAN GUIDE	1	
	11	949-216	MACHINE SCREW M4X10 (10 PCS.)	5	
	12	300-165	FELT (A)	1	
	13	300-164	DUST GUIDE	1	
	14	300-162	PAPER HOLDER	2	
	15	953-320	SPRING	2	
	16	872-971	RETAINING RING (E-TYPE) FOR D3 SHAFT	2	TILL 6.1998
	17A	316-549	HOLDER BAR	2	
	18	300-173	BOTTOM PLATE	1	
	19	300-166	FELT	1	
	20	620-3DD	BALL BEARING 6203DDCMPS2L	1	
	21	300-167	BALANCE WEIGHT	1	
	22A	300-318	COVER	1	
	24	300-090	SANDING PAD (PERFORATED)	1	
	25	949-454	SPRING WASHER M5 (10 PCS.)	6	
	26	949-238	MACHINE SCREW M5X14 (10 PCS.)	6	
	27	982-095	TAPPING SCREW (W/WASHER) D4X20	4	
	28	300-157	HANDLE COVER	1	
	29	940-811	PUSHING HOLDER	1	
*	30	957-747	SWITCH (A) (1P SCREW TYPE) W/LOCK	1	
*	30	971-667Z	SWITCH (2P PILLAR TYPE) W/LOCK	1	
*	31	981-373	TUBE (D)	2	FOR NOISE SUPPRESSOR
*	32	980-063	TERMINAL	1	FOR NOISE SUPPRESSOR
*	33	992-635	EARTH TERMINAL	1	FOR NOISE SUPPRESSOR
*	34	959-140	CONNECTOR 50091 (10 PCS.)	1	
*	35	994-273	NOISE SUPPRESSOR	1	
*	36	930-153	SUPPORT (B)	1	FOR NOISE SUPPRESSOR
*	36	963-243	SUPPORT	1	FOR NOISE SUPPRESSOR FOR NZL,SAF
	37	300-156	TOP COVER	1	
	38	300-319	MACHINE SCREW (+-HD.) M5X60	4	

*:ALTERNATIVE PARTS

	ITEM No.	CODE No.	DESCRIPTION	No. USED	REMARKS
	39	999-041	CARBON BRUSH (1 PAIR)	2	
	40	930-483	BRUSH HOLDER	2	
	41	300-154	HOUSING	1	
	42	300-174	HITACHI LABEL	1	
*	43	300-179	INTERNAL WIRE	1	
*	43	300-178	INTERNAL WIRE	1	FOR AUS
*	43	300-180	INTERNAL WIRE	1	FOR USA,CAN
*	44	305-775	CHOKE COIL SET	2	
*	44	300-205	INTERNAL WIRE	2	FOR CAN
*	44	301-843	INTERNAL WIRE	2	FOR USA
*	45	300-175	INTERNAL WIRE	1	
*	45	300-176	INTERNAL WIRE	1	FOR EUROPE
*	45	300-181	INTERNAL WIRE	1	FOR AUS
*	45	300-182	INTERNAL WIRE	1	FOR USA,CAN
*	46	340-156C	STATOR 110V-115V	1	
*	46	340-156D	STATOR 127V	1	
*	46	340-156E	STATOR 220V	1	
*	46	340-156F	STATOR 230V-240V	1	
*	46	340-156G	STATOR 220V-230V	1	FOR ITA,FRA,AUT
*	46	340-156H	STATOR 230V-240V	1	FOR GBR,SAF,HOL,DEN,SWE,NOR,ESP,FIN,SUI
*	46	340-156J	STATOR 110V	1	FOR GBR
	47	608-VVM	BALL BEARING 608VVC2PS2L	1	
	48	953-174	HEX. HD. TAPPING SCREW D5X55	2	
	49	300-155	FAN GUIDE	1	
*	50	360-124U	ARMATURE ASS'Y 110V-115V	1	INCLUD.1,47
*	50	360-124D	ARMATURE 127V	1	
*	50	360-124E	ARMATURE 220V-230V	1	
*	50	360-124F	ARMATURE 230V-240V	1	FOR SIN,KUW,NGU,NZL,AUS,SAF
	51	946-362	BEARING LOCK	2	
	52		NAME PLATE	1	
*	53	500-212Z	CORD	1	(CORD ARMOR D8.8)
*	53	500-409Z	CORD	1	(CORD ARMOR D8.8) FOR INA
*	53	500-245Z	CORD	1	(CORD ARMOR D10.1) FOR ESP
*	53	500-237Z	CORD	1	(CORD ARMOR D8.8) FOR GBR (110V)
*	53	500-240Z	CORD	1	(CORD ARMOR D8.8) FOR USA,CAN
*	53	500-420Z	CORD	1	(CORD ARMOR D8.8) FOR SAU (127V)
*	53	500-234Z	CORD	1	(CORD ARMOR D8.8) FOR ITA,FRG,FRA,HOL,
*					DEN,FIN,SWE,AUT,NOR,SAF
*	53	500-395Z	CORD	1	(CORD ARMOR D8.8) FOR SUI

*:ALTERNATIVE PARTS

	ITEM No.	CODE No.	DESCRIPTION	No. USED	REMARKS
*	53	500-439Z	CORD	1	(CORD ARMOR D8.8) FOR NGU,NZL,AUS
*	53A	500-435Z	CORD	1	(CORD ARMOR D8.8) FOR GBR (240V)
*	53A	500-447Z	CORD	1	(CORD ARMOR D8.8) FOR SYR
*	53A	500-423Z	CORD	1	(CORD ARMOR D8.8) FOR SIN,KUW,SAU (220V)
*	54	981-373	TUBE (D)	2	FOR CORD
*	55	980-063	TERMINAL	1	FOR CORD
	56A	305-812	TAPPING SCREW (W/FLANGE) D4X16 (BLACK)	2	
	57	937-631	CORD CLIP	1	
*	58	953-327	CORD ARMOR D8.8	1	
*	58	938-051	CORD ARMOR D10.1	1	

STANDARD ACCESSORIES

	ITEM No.	CODE No.	DESCRIPTION	No. USED	REMARKS
	501	300-177	DUST BAG	1	
	502	300-047	SANDING PAPERS 114X280 AA80 (10 PCS.)	1	(PERFORATED)
*	503	301-953	PUNCH PLATE	1	FOR AUS

*:ALTERNATIVE PARTS

MODELS SV 12V/SV 12SD/SV 12SE

1. PRECAUTIONS IN DISASSEMBLY AND REASSEMBLY:

Disassembly and reassembly procedures which require particular attention are described below. As the Models SV 12V, SV 12SD, and SV 12SE are essentially the same in basic structure, the Model SV 12V is utilized for example. Accordingly, the circled numbers in the descriptions correspond the Parts List and exploded assembly diagram for the Model SV 12V, and will differ for the other two models.

1-1. Disassembly:

(1) Disassembly of the Armature ⑤⓪:

A. Loosen the two D4 x 20 Tapping Screws ②⑦, and remove the Top Cover ③⑧.
B. Lift up the rear portions of the Brush Holders ④①, and take them out of the Housing ④②.
C. Remove the Carbon Brushes ④⓪ from the Brush Holders ④①.
D. Loosen the four M5 x 60 Machine Screws ③⑨, and disassemble the Housing ④② from the Frame ④.
E. Loosen the six M5 x 14 Machine Screws ②⑥, and remove the Pad ②④.
F. Remove the Cover Ass'y ②② from the Bottom Plate ①⑧.
G. Fit the Wrench Ass'y (Special Repair Tool, Code No 936522) into the holes provided on the Balance Weight ②① to hold it in position. Then turn the Armature ⑤⓪ counterclockwise by hand to loosen and remove it from the Bottom Plate ①⑧.
H. Finally, lightly tap on the tip of the Armature ⑤⓪ with a wooden or plastic hammer to loosen and remove the Armature ⑤⓪ from the Frame ④.

(2) Disassembly of the Stator ㊻:

A. Following the procedures described in Items A to D above, remove the Housing ㊷ from the Frame ④.

B. Loosen the two D4 x 20 Tapping Screws ㉗, and remove the Handle Cover ㉘.

C. Disconnect the Speed Controller ㊷ leadwire from the Switch ㉚.

D. Cut off and remove the Speed Controller ㊷ leadwire and the Internal Wire ㊹.

E. As illustrated in Fig. 5, insert a small, slender minus-head screwdriver into the stator terminal portion of the Stator ㊻, and gently bend back portion “a” just enough so that the Control Circuit ㊷ leadwire can be withdrawn. (At this time, be very careful not to excessively bend portion “a” within the stator terminal. If it is deformed, the leadwire cannot be properly secured when it is reinserted.)

F. Loosen the two D5 x 55 Hexagon Hd. Tapping Screws ㊽, and lightly tap the end surface of the Housing ㊷ with a wooden or plastic hammer to loosen and remove the Stator ㊻ from the Housing ㊷.

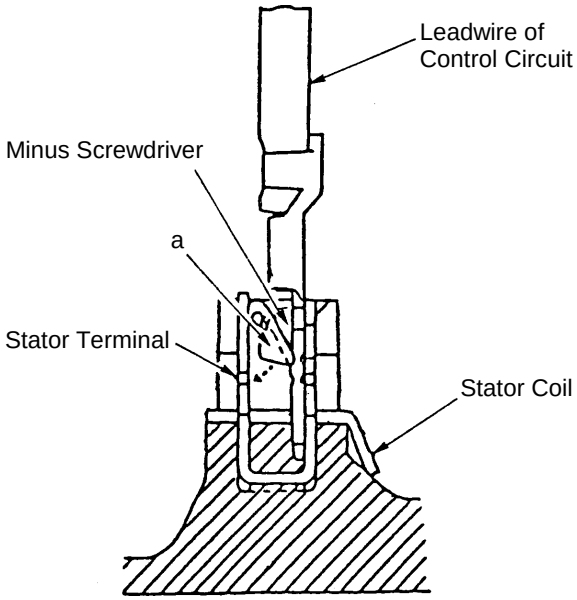

Fig. 5

(3) Remove the Levers ⑥:

A. Following the procedures described in Items A to F in Paragraph (1) (Disassembly of the Armature) above, remove the Bottom Plate ⑱.

B. Loosen the two M4 x 16 Machine Screws ⑧, and remove the two Levers ⑥.

(4) Remove the Paper Holders ⑭:

A. Following the procedures described in Items A to F in Paragraph (1) (Disassembly of the Armature) above, remove the Bottom Plate ⑱.

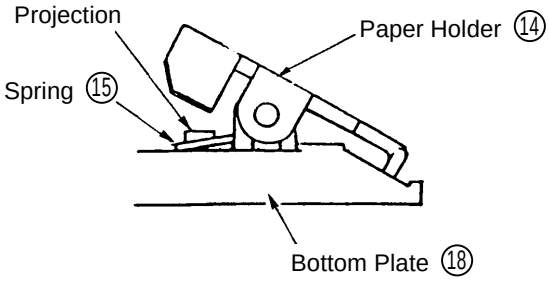

Fig. 6

B. With a minus screwsdriver or similar tool, disconnect the ends of the two Springs ⑮ from the projections provided on the Bottom Plate ⑱ (see Fig. 6)

C. Finally, extract the two Holder Bars ⑰ (from the sides on which their D3 E-Type Retaining Rings ⑯ are mounted), and remove the two Paper Holders ⑭.

(5) Remove the Balance Weight ㉑:

A. Following the procedures described in Items A to F in Paragraph (1) (Disassembly of the Armature) above, remove the Bottom Plate ⑱.

B. As illustrated in Fig. 7, support the Bottom Plate ⑱ with a tubular jig (inner dia. ϕ69 - ϕ71mm, outer dia. ϕ81mm or less), and place a sleeve (inner dia. ϕ18mm, outer dia. ϕ21mm) on the Felt ⑲ mounted above the 6203DDCM Ball Bearing ⑳. Then press down on the sleeve with a hand press to remove the Balance Weight ㉑ together with the 6203DDCM Ball Bearing ⑳ and the Felt ⑲.

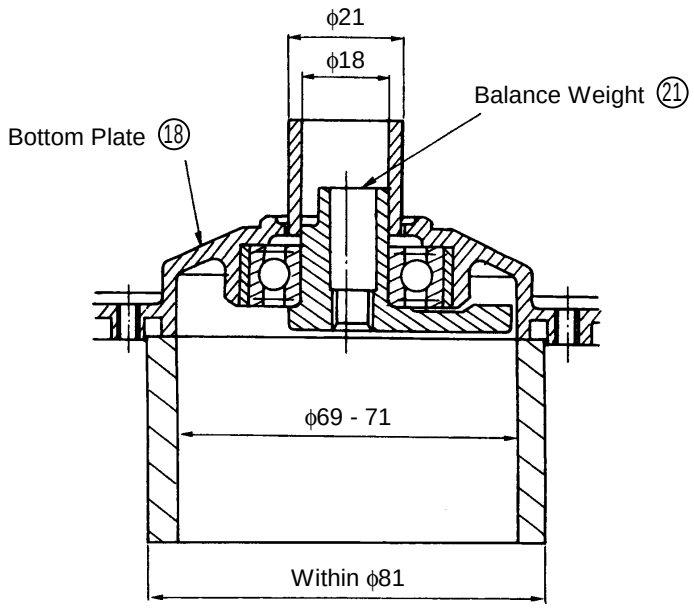

Fig. 7

1-2. Reassembly:

Reassembly can be accomplished by following the disassembly procedures in reverse. However, special attention should be given to the following items.

(1) Reassembly of the Paper Holder Section:

A. First mount the D3 E-Type Retaining Rings ⑯ on the Holder Bars ⑰.

B. Place the Spring ⑮ onto the Bottom Plate ⑱ so that the projecting coil of the Spring fits into the elongated hole, as illustrated in Fig. 8.

C. Then, mount the Paper Holder ⑭ onto the paper holder fulcrums, and pass the Holder Bar ⑰ through the paper holder fulcrums, Paper Holder ⑭, and Spring ⑮ so that the D3 E-Type Retaining Ring ⑯ is positioned on the side marked “b” in Fig. 8.

D. Finally, insert a J-187 Hook (special Repair Tool, Code No. 970968 through the Paper Holder ⑭ hole and into the elongated hole of the Bottom Plate ⑱. Then, as illustrated in Fig. 9, pry the projecting coil of the Spring ⑮ upward and over so that it hooks onto the projection provided on the Bottom Plate ⑱, and fixes the Spring ⑮ in position.

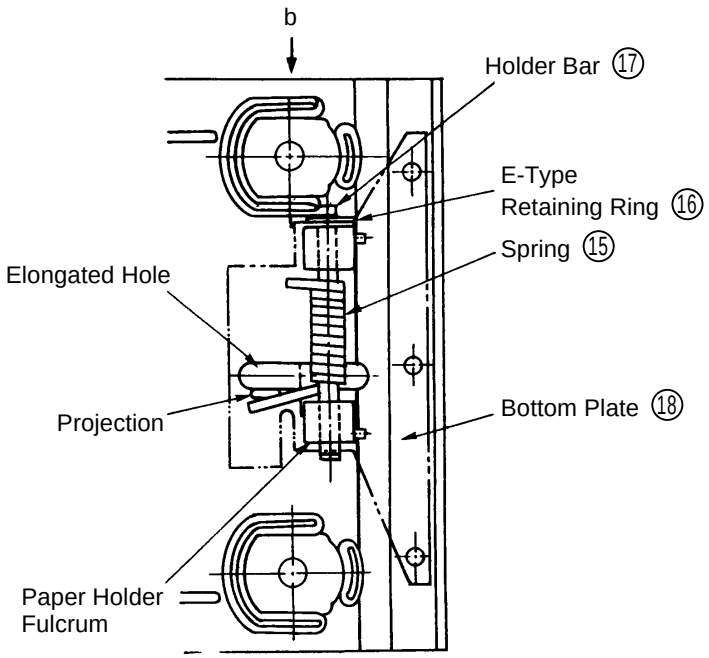

Fig. 8

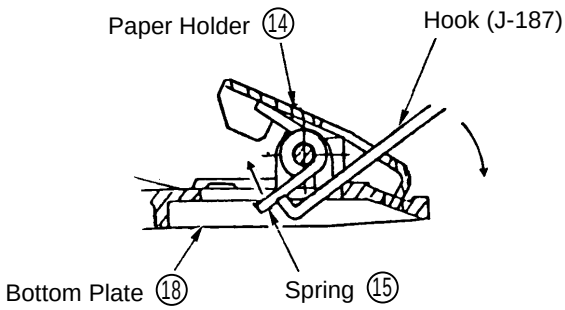

Fig. 9

(2) Reassembly of the Balance Weight Section: If there is even slight looseness or misalignment of the Balance Weight ㉑ and the 6203 DDCM Ball Bearing ⑳, it will cause excessive vibration and poor operation

of the tool. Once a Balance Weight ㉑ has been removed from tool, it must not be used again. Accordingly, if it is necessary to replace the 6203DDCM Ball Bearing ⑳, the Balance Weight ㉑ must also be replaced with a new one.

A. Press fit the 6203DDCM Ball Bearing ⑳ onto the new Balance Weight ㉑ with a hand press.

B. Fit the Felt ⑲ onto the ϕ17mm shaft of the Balance Weight ㉑.

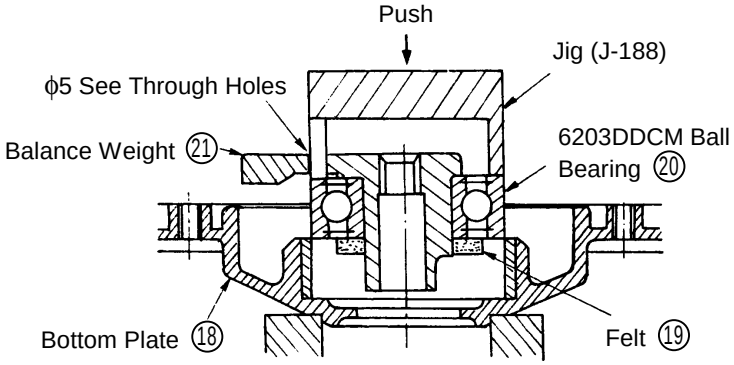

Fig .10

C. Finally, as illustrated in Fig. 10, mount a J-188 Jig (Special Repair Tool, Code No. 970969 and press fit the assembled Balance Weight ㉑, 6203DDCM Ball Bearing ⑳ and Felt ⑲ into the Bottom Plate ⑱.

1-3. Screw Tightening Torque:

(1) D5 Tapping Screws ..... 25 - 35 kgf-cm (22 - 30 lb-in)
(2) D4 Tapping Screws ..... 15 - 25 kgf-cm (13 - 22 lb-in)
(3) Balance Weight ..... 60 - 90 kgf-cm (53 - 80 lb-in)

1-4. Wiring Diagram:

(1) SV 12V

A. For European countries

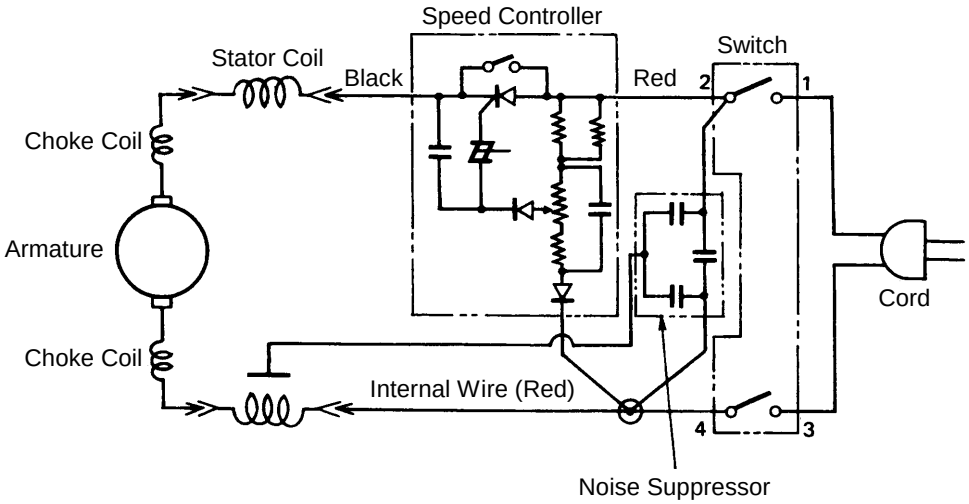

B. For Australia

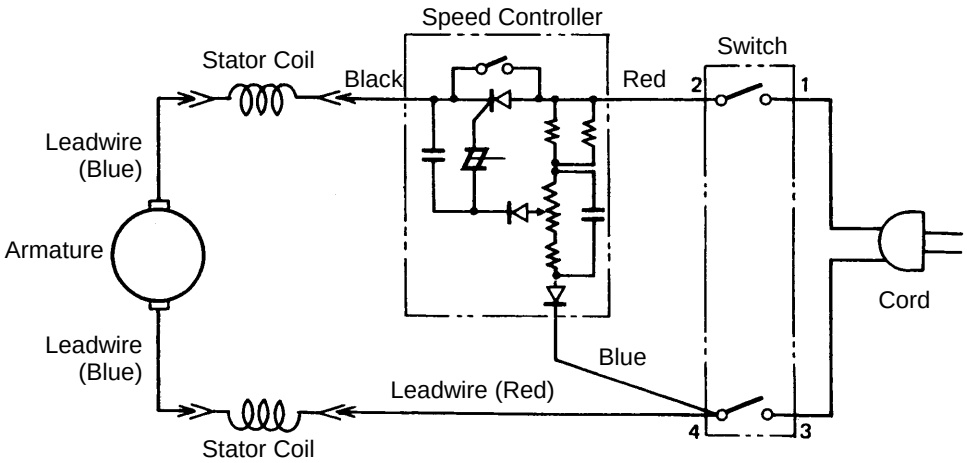

C. For New Zealand

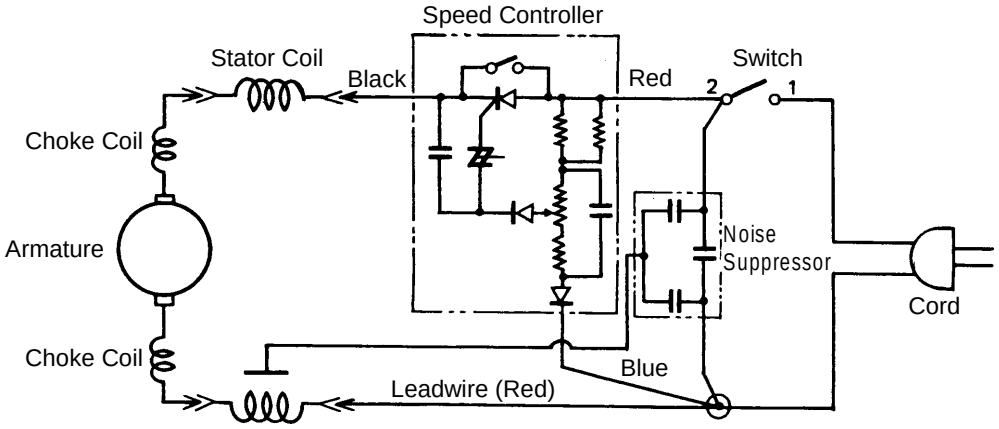

D. For U.S.A., Canada and Spain

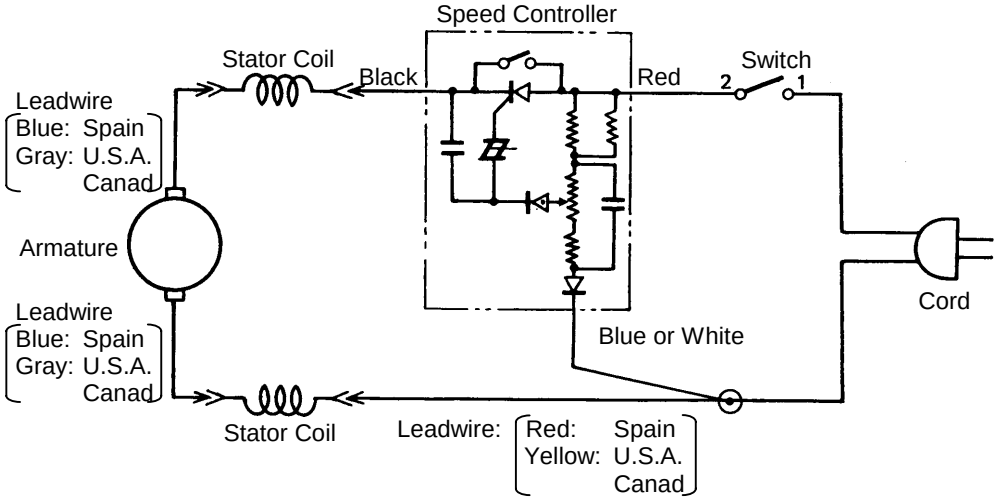

(2) SV 12SD and SV 12SE

A. For European countries

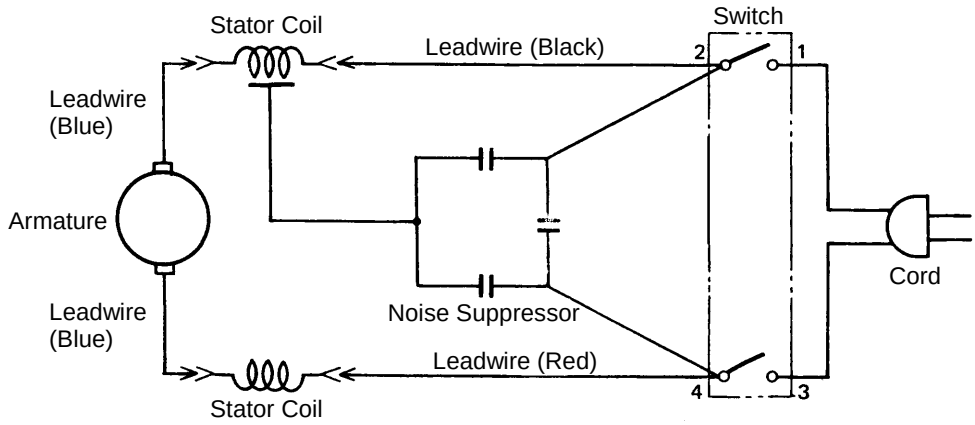

B. For Australia

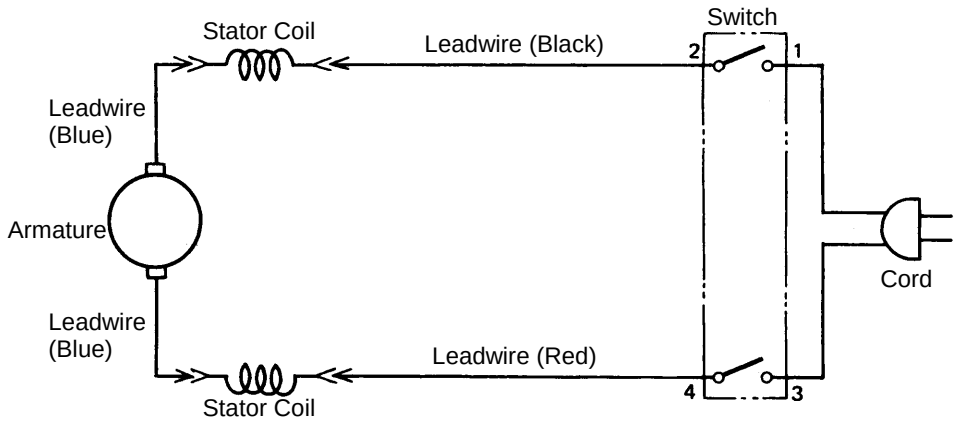

C. For New Zealand and South Africa

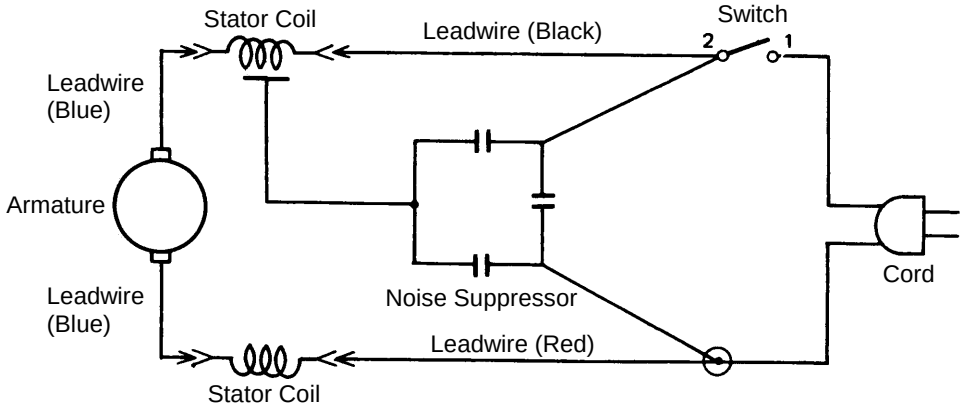

D. For other countries

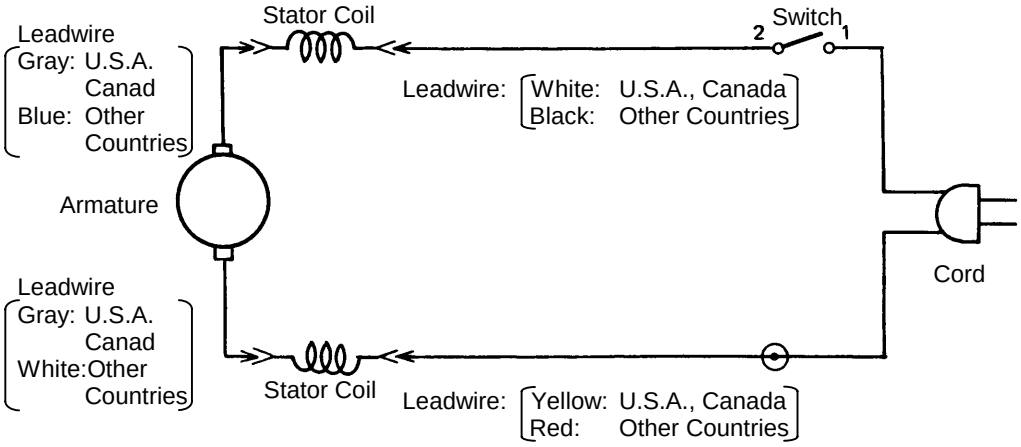

1-5. Insulation Tests:

On completion of disassembly and repair, measure the insulation resistance and conduct dielectric strength test.

Insulation Resistance: 7MΩ or more with DC500V Megohm Tester.

Dielectric Strength:	AC4000V/1 minute, with no abnormalities	220V - 240V (and 110V for U.K. products)
	AC2500V/1 minute, with no abnormalities	110V - 127V (except U.K. products)

1-6. No-Load Current Value:

After no-load operation for 30 minutes, the current value should be as follows:

Voltage	110V	115V	120V	127V	220V	230V	240V
Current (Max.)	2.4A	2.2A	2.1A	2.0A	1.2A	1.2A	1.1A